MoniQ-1500/1700/1900/2150

OPS-module-pluggable
Multi-touch Flat Panel Monitor

- Square-screen: 15"/17"/19" LCD display
- Widescreen: 21.5" LCD display
- 10-point multi-touch PCT touchscreen
- 1x OPS module slot
- 1x HDMI, 1x DVI-D, 1x VGA
- 1x USB2.0 for touch functionality
- IP65-rated front design
- Glass hardness of 6H
- Entirely flat-front design
- “Monitor” mode and “Panel PC” mode switchable

Product Overview

MoniQ is an innovative multi-touch flat panel monitor with an OPS module slot reserved. Thus, it could be a monitor when you connect it to a PC and could transform into a panel PC when you insert an OPS module into it. You can easily switch the mode between "Monitor" and "Panel PC" via OSD menu.

The 10-point PCT multi-touch panel provides a friendly intuitive interface and enables possible gesture-controlled applications. The widescreen model (21.5”) also provides users a natural, comfortable, non-tiring viewing experience.

Besides, it comes with a variety of display ports, including 1x HDMI, 1x DVI-D and 1x VGA, for various viewing options, and 1x USB 2.0 for touch functionality.

With the IP65-rated front design and anti-scratch glass surface, MoniQ provides excellent resistance to harsh environmental conditions such as water splash, dust and careless contact with a sharp / rough object.

MoniQ transforms into a panel PC when you insert an OPS module into it.

Technical Information

LCD Display	MoniQ-1500	MoniQ-1700	MoniQ-1900	MoniQ-2150
Display Size	15 inch	17 inch	19 inch	21.5 inch
Aspect Ratio	4:3	5:4	5:4	16:9
Backlight	LED	LED	LED	LED
Resolution	1024x768	1280x1024	1280x1024	1920x1080
Brightness (cd/m², typ.)	350	350	250	250
Contrast Ratio (typ.)	600:1	1000:1	1000:1	5000:1
Color	16.2M	16.2M	16.7M	16.7M
View Angle (L/R/H/L, °)	85/85/80/80	85/85/80/80	85/85/80/80	89/89/89/89
Touch	10-point PCT	10-point PCT	10-point PCT	10-point PCT
Display Interfaces				
1x HDMI (on rear)				
1x DVI-D (on rear)				
1x VGA (on rear)				
Audio Interfaces				
1x Line-out (on rear)				
1x Line-in (on rear)				
USB				
1x USB2.0 (Type A on rear for Touch, working only in "Monitor" mode)				
OPS Slot				
1x OPS module slot (with cover on right side)				
Power Supply				
Connector: Lockable DC Jack (on rear)				
Input Voltage: DC 12V (default), 24V or other options (by request)				
Power Adapter: AC to DC, 100V ~ 240V				

System Control & Monitoring
1x Power LED (on left side)
1x Power Button (on left side)
1x Menu / Enter Button (on left side)
1x Up Button (on left side)
1x Down Button (on left side)
1x Exit Button (on left side)
Cooling
1x System Smart Fan (working only when OPS module is in operation)
Construction
Glass Surface + Slim Aluminum Frame + Metal Chassis
Dimension (W x H x D)
MoniQ-1500: 381.7 x 305.6 x 69.3 mm / 15.03" x 12.03" x 2.73"
MoniQ-1700: 413.0 x 343.9 x 73.3 mm / 16.26" x 13.54" x 2.89"
MoniQ-1900: 447.3 x 372.0 x 68.3 mm / 17.61" x 14.65" x 2.69"
MoniQ-2150: 542.6 x 339.2 x 73.5 mm / 21.36" x 13.35" x 2.89"
Weight
MoniQ-1500: 4.6 kg / 10.14 lb
MoniQ-1700: 5.8 kg / 12.79 lb
MoniQ-1900: 6.4 kg / 14.11 lb
MoniQ-2150: 8.8 kg / 19.4 lb
Environmental Characteristics
Operation Temperature: 0°C ~ 50°C / 32°F ~ 122°F
Storage Temperature: -20°C ~ 70°C / -4°F ~ 158°F
Humidity: 0% ~ 95%
Mounting
VESA Mount, Panel Mount
Certification
CE, FCC Class A, IP65 (front)

OPS Docking Pin Assignment

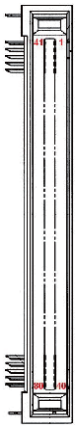

Pin	Signal Name	Pin	Signal Name	Pin	Signal Name	Pin	Signal Name
1	DDP_3N	21	TMDS_0+	41	StdB_SSRX-	61	USB_PP2
2	DDP_3P	22	GND	42	StdB_SSRX+	62	GND
3	GND	23	TMDS_1-	43	GND	63	USB_PN1
4	DDP_2N	24	TMDS_1+	44	StdB_SSTX-	64	USB_PP1
5	DDP_2P	25	GND	45	StdB_SSTX+	65	GND
6	GND	26	TMDS_2-	46	GND	66	USB_PN0
7	DDP_1N	27	TMDS_2+	47	USB_PN3	67	USB_PP0
8	DDP_1P	28	GND	48	USB_PP3	68	GND
9	GND	29	DVI_DDC_DATA	49	GND	69	AZ_LINEOUT_L
10	DDP_0N	30	DVI_DDC_CLK	50	SYS_FAN	70	AZ_LINEOUT_R
11	DDP_0P	31	DVI_HPD	51	UART_RXD	71	CEC
12	GND	32	GND	52	UART_TXD	72	PB_DET
13	DDP_AUXN	33	+19V	53	GND	73	PS_ON#
14	AAP-AUXP	34	+19V	54	StdA_SSRX-	74	PWR_STATUS
15	DDP_HPD	35	+19V	55	StdA_SSRX+	75	GND
16	GND	36	+19V	56	GND	76	GND
17	TMDS_CLK-	37	+19V	57	StdA_SSTX-	77	GND
18	TMDS_CLK+	38	+19V	58	StdA_SSTX+	78	GND
19	GND	39	+19V	59	GND	79	GND
20	TMDS_0-	40	+19V	60	USB_PN2	80	GND

I/O Panels

Rear Side

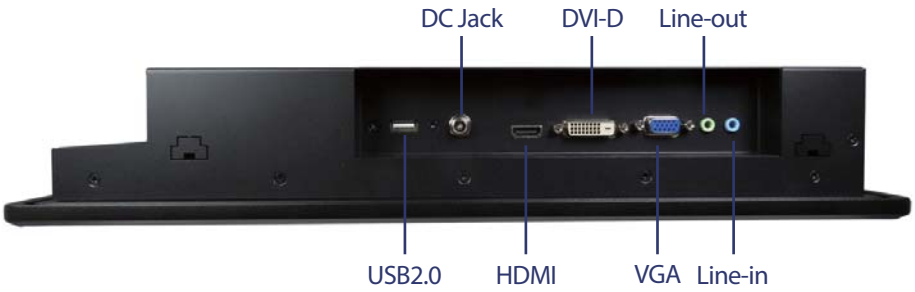

Right Side

Left Side

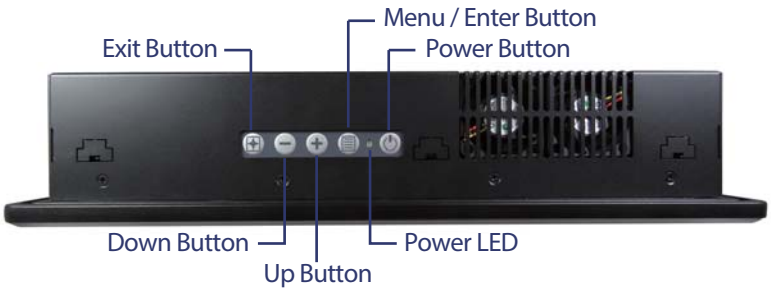

Mechanical Dimensions

MoniQ-1500

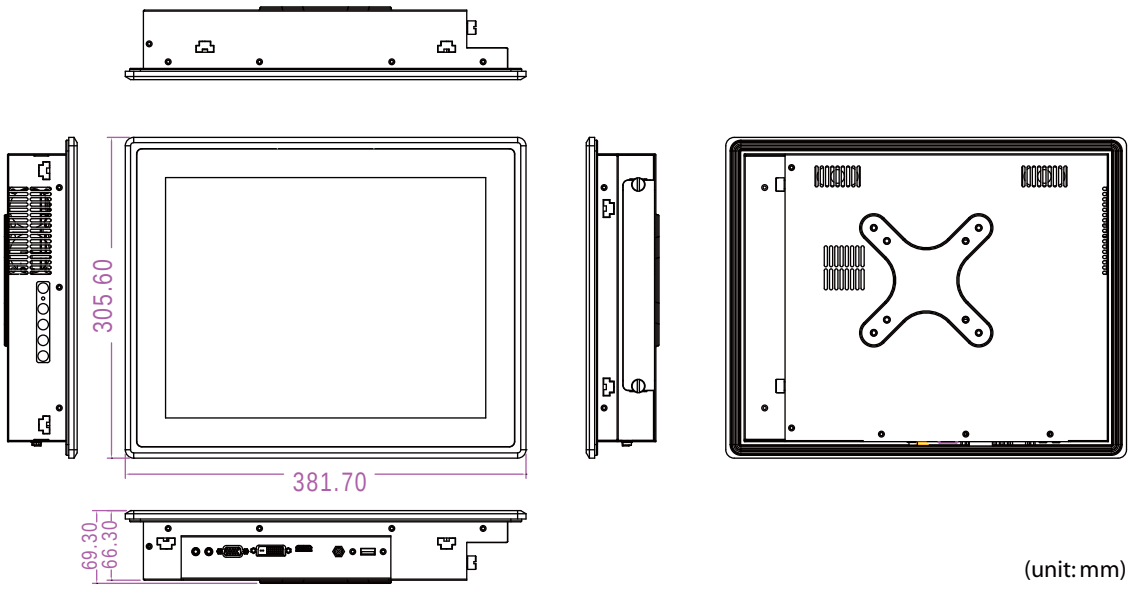

(unit: mm)

MoniQ-1700

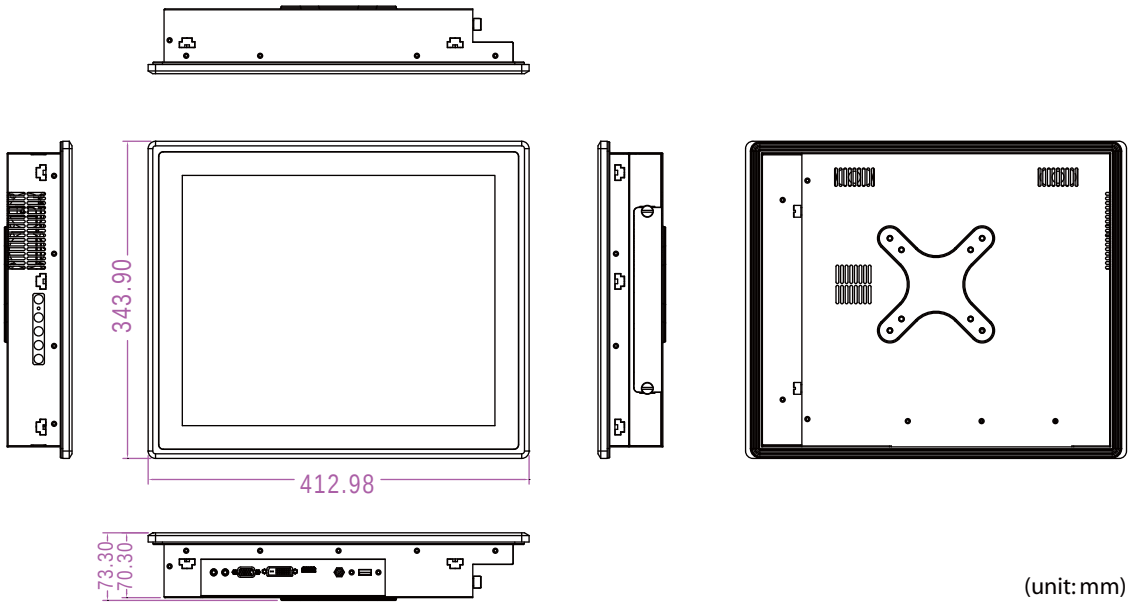

(unit: mm)

MoniQ-1900

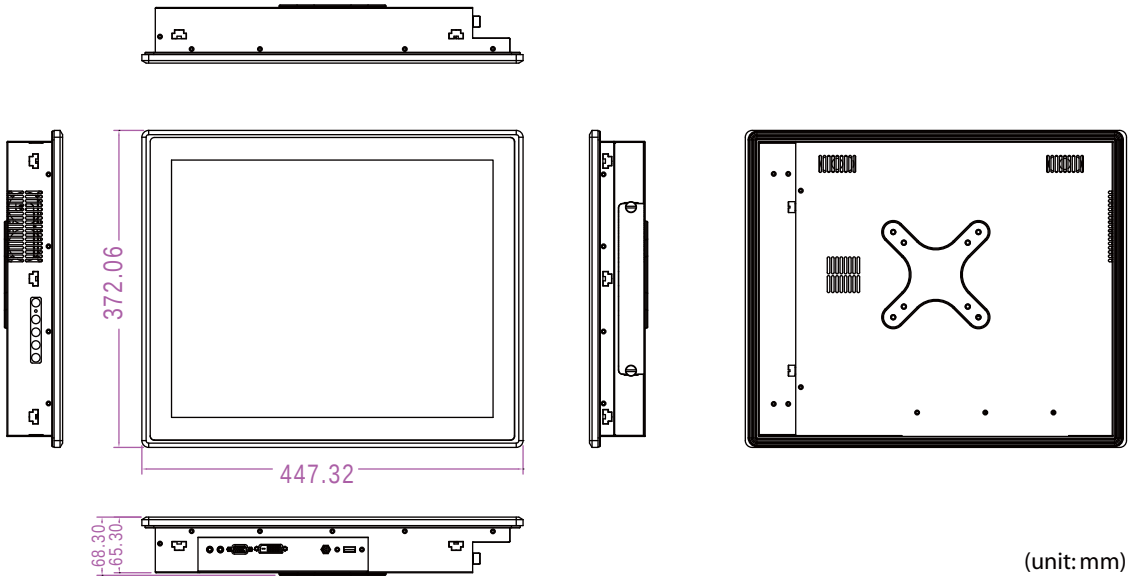

(unit: mm)

MoniQ-2150

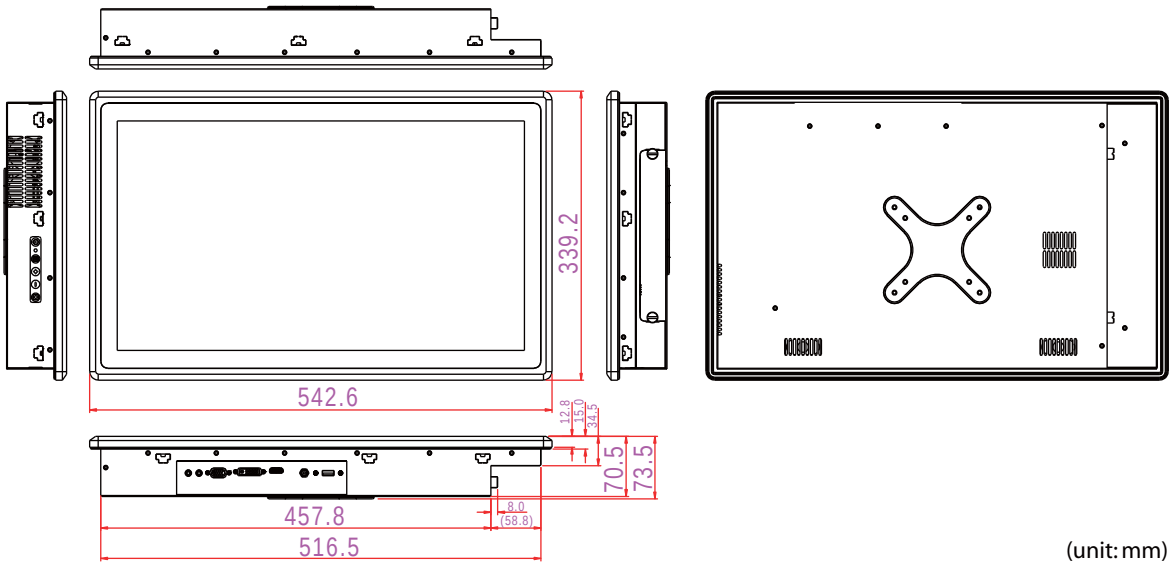

(unit: mm)

Ordering Information

Article	Description
MoniQ-1500	15" 4:3 10pt PCT, 1x HDMI, 1x DVI-D, 1x VGA, 1x USB2.0, 1x Line-out, 1x Line-in
MoniQ-1700	17" 5:4 10pt PCT, 1x HDMI, 1x DVI-D, 1x VGA, 1x USB2.0, 1x Line-out, 1x Line-in
MoniQ-1900	19" 5:4 10pt PCT, 1x HDMI, 1x DVI-D, 1x VGA, 1x USB2.0, 1x Line-out, 1x Line-in
MoniQ-2150	21.5" 16:9 10pt PCT, 1x HDMI, 1x DVI-D, 1x VGA, 1x USB2.0, 1x Line-out, 1x Line-in

Optional Accessories

Product Name	Description
VESA Mounting Kit	Hole pattern: 100 x 100 mm & 75 x 75 mm, dimension: 163 x 130 mm

Available OPS Modules

Article	Description
OPS-2051	Intel® Core™ i7-6820HQ, Intel® QM170, 2x DDR4 SO-DIMM, 2x HDMI2.0, 2x DP, 2x GbE LAN, 6x USB3.0, 2x USB2.0, 1x M.2 Key A, 1x M.2 Key B, w/o TPM, w/ iAMT
OPS-2053	Intel® Core™ i5-6440HQ, Intel® QM170, 2x DDR4 SO-DIMM, 2x HDMI2.0, 2x DP, 2x GbE LAN, 6x USB3.0, 2x USB2.0, 1x M.2 Key A, 1x M.2 Key B, w/o TPM, w/ iAMT
OPS-2002	Intel® Core™ i5-6200U, 2x DDR4 SO-DIMM, 1x HDMI2.0, 2x DP, 2x GbE LAN, 6x USB3.0, 2x USB2.0, 1x M.2 Key A, 1x mPCIe, w/o TPM, w/o iAMT
OPS-2010	Intel® Core™ i5-7200U, 2x DDR4 SO-DIMM, 1x HDMI2.0, 2x DP, 2x GbE LAN, 6x USB3.0, 2x USB2.0, 1x M.2 Key A, 1x mPCIe, w/o TPM, w/o iAMT
OPS-1050	Intel® Core™ i7-4700EQ, Intel® QM87, 2x DDR3/L SO-DIMM, 2x HDMI, 2x DP, 2x GbE LAN, 6x USB3.0, 2x USB2.0, 2x mSATA/mPCIe, w/ TPM, w/ iAMT
OPS-1060	Intel® Core™ i5-4400E, Intel® QM87, 2x DDR3/L SO-DIMM, 2x HDMI, 2x DP, 2x GbE LAN, 6x USB3.0, 2x USB2.0, 2x mSATA/mPCIe, w/ TPM, w/ iAMT
OPS-1070	Intel® Core™ i7-5700EQ, Intel® QM87, 2x DDR3/L SO-DIMM, 2x HDMI, 2x DP, 2x GbE LAN, 6x USB3.0, 2x USB2.0, 2x mSATA/mPCIe, w/ TPM, w/ iAMT
OPS-1080	Intel® Core™ i7-5850EQ, Intel® QM87, 2x DDR3/L SO-DIMM, 2x HDMI, 2x DP, 2x GbE LAN, 6x USB3.0, 2x USB2.0, 2x mSATA/mPCIe, w/ TPM, w/ iAMT
OPS-110	Intel® Celeron® J1900, 2x DDR3L SO-DIMM, 1x HDMI, 1x DP, 1x DVI, 2x GbE LAN, 2x USB3.0, 5x USB2.0, 1x mSATA, 1x mPCIe, w/ TPM, w/o iAMT
OPS-120	Intel® Celeron® N2930, 2x DDR3L SO-DIMM, 1x HDMI, 1x DP, 1x DVI, 2x GbE LAN, 2x USB3.0, 5x USB2.0, 1x mSATA, 1x mPCIe, w/o TPM, w/o iAMT